Published: 11-May-2011

Automatic Transmission / Transaxle - V6 4.0L Petrol / TDV6 2.7L Diesel - Diagnostics

Diagnosis and Testing

Principle of Operation

For a detailed description of the automatic transmission/transaxle system and operation, refer to the relevant Description and Operation sections in the workshop manual.

Fluid Level and Condition Check

CAUTION: The vehicle should not be driven if the fluid level is low as internal failure can result.

• NOTE: The transmission fluid temperature must not be allowed to exceed 50°C (122°F) whilst checking level. Should the temperature rise above this figure, abort the check and allow the transmission fluid to cool to below 30°C (86°F).

This vehicle is not equipped with a fluid level indicator. An incorrect level may affect the transmission operation and could result in transmission damage. To correctly check and add fluid to the transmission. Refer to the relevant section in the workshop manual.

High Fluid Level

A fluid level that is too high may cause the fluid to become aerated due to the churning action of the rotating internal parts. This will cause erratic control pressure, foaming, loss of fluid from the vent tube and possible transmission damage. If an overfill condition is identified, with the engine at idle ensure the fluid temperature is within the specified range and allow the excess fluid to drain until a small thread of fluid runs from the filler/level plug hole.

Low Fluid Level

A low fluid level could result in poor transmission engagement, slipping, or damage. This could also indicate a leak in one of the transmission seals or gaskets.

Adding Fluid

CAUTION: The use of any other type of transmission fluid other than that specified can result in transmission damage.

If fluid needs to be added, add fluid in 0.50 liter increments through the fill hole opening. Do not overfill the fluid. For fluid type, refer to the Specification section in the workshop manual.

Fluid Condition Check

1. **1.** Check the fluid level.
2. **2.** Observe the color and the odor of the fluid. The color under normal circumstances should be like honey, not dark brown or black.
3. **3.** Allow the fluid to drip onto a facial tissue and examine the stain.
4. **4.** If evidence of solid material is found, the transmission fluid pan should be removed for further inspection.

NOTE: In the event of a transmission unit replacement for internal failure, the oil cooler and pipes must also be replaced.

Inspection and Verification

CAUTION: Diagnosis by substitution from a donor vehicle is **NOT** acceptable. Substitution of control modules does not guarantee confirmation of a fault, and may also cause additional faults in the vehicle being tested and/or the donor vehicle.

1. **1.** Verify the customer concern.
2. **2.** Visually inspect for obvious signs of damage and system integrity.

Visual Inspection

Mechanical	Electrical	Hydraulic
• Damaged/stuck shift mechanism • Damaged automatic transmission casing	• Blown fuse(s) • Damaged, loose or corroded connectors • Wiring harness	• Fluid level too high/low • Poor condition of fluid • Fluid leak

3. **3.** If an obvious cause for an observed or reported concern is found, correct the cause (if possible) before proceeding to the next step.
4. **4.** If the cause is not visually evident check for Diagnostic Trouble Codes (DTCs) and refer to the DTC Index.

DTC Index

transmissionmanuals.com

For a list of Diagnostic Trouble Codes (DTCs) that could be logged on this vehicle, please refer to Section 100-00. REFER to: Diagnostic Trouble Code (DTC) Index - DTC: Transmission Control Module (TCM) - Bosch (100-00 General Information, Description and Operation).

transmissionmanuals.com

Published: 11-May-2011

Automatic Transmission / Transaxle - V6 4.0L Petrol / TDV6 2.7L Diesel - Input Shaft Seal

Removal and Installation

Removal

1. **1.** WARNING: Do not work on or under a vehicle supported only by a jack. Always support the vehicle on safety stands.

   Raise and support the vehicle.

2. Remove the transmission assembly.

   Refer to: Transmission (307-01B Automatic Transmission/Transaxle - V6 4.0L Petrol, Removal and Installation).
   Refer to: Transmission (307-01B Automatic Transmission/Transaxle - V6 4.0L Petrol, Removal and Installation).
   Refer to: Transmission (307-01A Automatic Transmission/Transaxle - TDV6 2.7L Diesel, Removal and Installation).

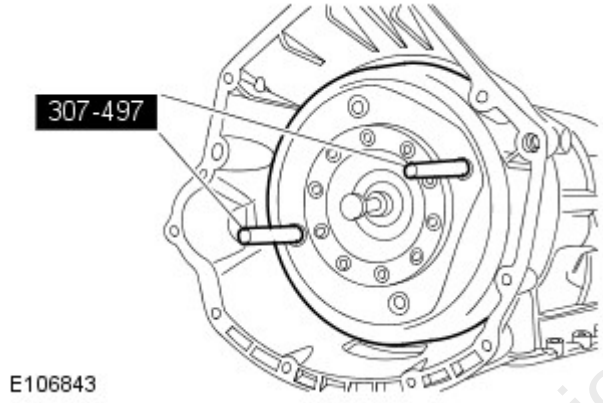

3. **3.** WARNING: Do not let the torque converter drop out of the transmission. Failure to follow this instruction may result in personal injury.

   Using the special tools, remove the torque converter. Drain any remaining fluid into a suitable container.

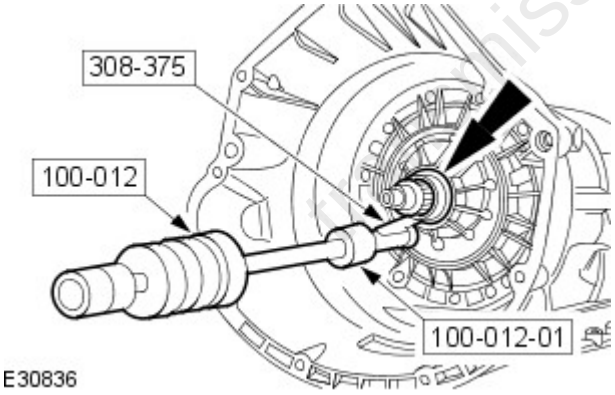

4. **4.** WARNING: Make sure the transmission housing seal face is not damaged when removing the torque converter seal. Failure to follow this instruction may result in damage to the vehicle.

   Using the special tools, remove the input shaft seal.

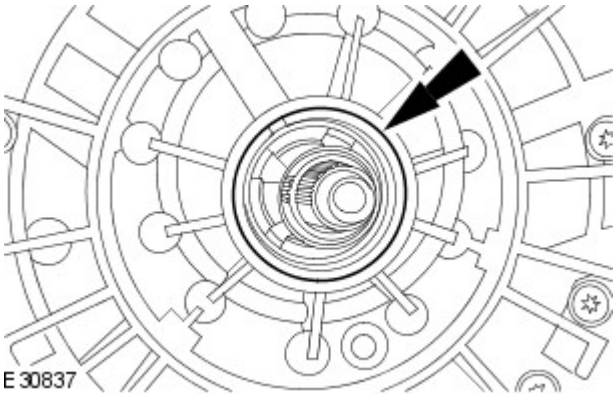

5. **5.** NOTE: Using a suitable metal surface cleaner meeting Jaguar specification. clean the seal face on the housing before fitting the new seal.

   Clean and inspect the transmission housing seal face.

Installation

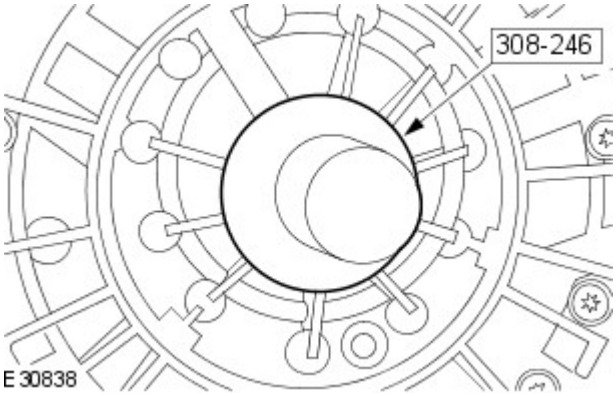

1. Using the special tool, install a new input shaft seal.

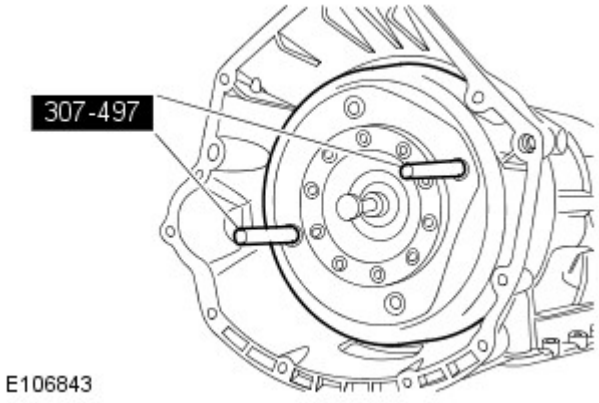

2. **2.** WARNING: Do not let the torque converter drop out of the transmission. Failure to follow this instruction may result in personal injury.

   • NOTE: The torque converter hub must engage fully in the oil pump drive gear.

   Using the special tools, install the torque converter. Remove the special tools.

3. Install the transmission assembly.

   Refer to: Transmission (307-01B Automatic Transmission/Transaxle - V6 4.0L Petrol, Removal and Installation).
   Refer to: Transmission (307-01B Automatic Transmission/Transaxle - V6 4.0L Petrol, Removal and Installation).
   Refer to: Transmission (307-01A Automatic Transmission/Transaxle - TDV6 2.7L Diesel, Removal and Installation).

transmissionmanuals.com